SWITCHING TRANSFORMERS FAEE,FAEI SERIES

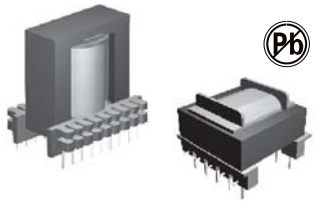

FEATURES

Possessing of high permeability
High saturation flux density
Low loss, at 100°C the power loss goes bottom

OPTIONS

Bulk packaging is standard
Custom design available

COMMON APPLICATIONS

Drive transformers
Main transformers
Smoothing chokes
General purpose use

ELECTRICAL CHARACTERISTICS

Part No.	Type	No.of FATEterminal pin	Dimensions(mm) Max A	Max B	Max C	±0.3 D	±0.5 E	±0.1 F	Max. output (VA)
FATEI 8.3-A	V	6	8.5	8.5	9.0	2.5	6.0	0.5	3
FATEE 8.3-B	H	6	8.5	8.5	7.0	2.5	6.0	0.5	3
FATEE 8.3-C	H	4	8.5	9.5	9.0	5.0	6.8	0.5	3
FATEI 10-A	V	8	10.5	11.0	11.0	2.5	8.0	0.5	5
FATEI 10-B	H	8	11.0	13.0	10.5	2.5	10.5	0.5	5
FATEI 10-C	H	4	10.0	9.5	10.0	5.0	6.8	0.5	5
FATEI 12.5-A	V	10	13.0	13.0	10.0	2.5	7.5	0.6	8
FATEE 12-A	H	4	12.5	11.0	12.5	8.0	9.0	0.6	8
FATEE 13-A	V	10	13.5	13.0	12.0	2.5	8.7	0.6	9
FATEI 14-A	V	6	14.5	14.5	13.0	3.5	11.0	0.6	15
FATEE 16-A	V	6	16.5	13.5	13.0	3.0	9.0	0.6	25
FATEE 16-B	H	8	16.5	14.5	15.0	3.0	11.0	0.6	25
FATEE 16-C	H	8	16.5	14.5	15.0	3.5	12.0	0.6	25
FATEE 16-D	V	10	16.5	13.5	14.5	3.25	10.5	0.6	25
FATEE 16-F	H	10	16.5	19.0	14.0	3.2	15.5	0.8	25
FATEEL 16-A	V	10	22.0	16.5	30.0	4.0	10.3	0.6	25
FATEE 19-A	V	6	20.0	18.0	18.0	4.1	14.0	0.7	35
FATEE 19-B	V	6	20.0	16.0	18.0	4.7	11.6	0.6	35
FATEE 19-C	H	8	20.0	18.0	16.5	3.8/5	12.5	0.7	35
FATEEL 19-A	V	8	20.0	20.5	32.0	3.8/4.8	15.0	0.8	35
FATEEL 19-B	H	6	19.5	32.0	13.0	5	24.2	0.8	35
FATEEL 19-C	V	10	23.0	16.5	32.0	4	10.0	0.8	35
FATEE 20-A	H	8	20.5	19.0	13.0	5	15.0	0.8	35
FATEE 22-A	V	10	22.5	16.5	20.0	4	10.2	0.8	45
FATEE 22-B	V	8	22.5	17.0	20.0	5	12.4	0.8	45
FATEE 22-C	H	9	22.5	24.5	16.5	3.5/5	17.2	0.8	45
FATEE 25-A	V	8	25.5	18.0	22.0	5	12.4	0.8	65
FATEE 25-B	V	10	26.0	20.5	22.0	5	15.2	0.8	65
FATEE25-C	H	10	27.0	24.0	24.0	4.0/5	14.6	0.8	65
FATEEL 25-A	H	14	27.5	33.5	21.0	4.0	27.1	0.8	65

Part No.	Type	No.of FATEterminal pin	Dimensions(mm) Max A	Max B	Max C	±0.3 D	±0.5 E	±0.1 F	Max. output (VA)
FATEL 25-B	V	14	27.5	21.0	35.0	4.0	15.0	0.8	65
FATEI 28-A	V	12	29.5	25.0	24.0	5.0	17.5	0.8	100
FATEI 28-B	V	10	28.5	25.0	35.0	5.0	20.0	0.8	100
FATEI 28-C	H	8	28.5	25.0	25.0	5.0	17.5	0.8	100
FATEI 30-A	V	10	31.0	22.0	26.0	5.0	17.6	0.8	155
FATEI 30-B	V	12	31.0	26.0	26.0	5.0	20.0	0.8	155
FATEE 30-A	H	10	30.5	30.0	20.5	5.0	25.0	0.8	155
FATEE 30-B	H	12	30.5	30.0	20.5	5.0	25.0	0.8	155
FATEI 33-A	V	14	34.0	28.0	30.0	5.0	22.5	0.8	200
FATEI 33-B	V	12	34.0	28.0	30.0	5.0	22.5	0.8	200
FATEI 33-C	V	16	39.0	29.0	30.0	5.0	22.5	0.8	200
FATEE 35-A	H	12	38.0	30.0	26.0	3.8/5.1	22.0	0.8	215
FATEE 35-B	V	10	35.5	26.0	28.0	5.0	20.0	0.8	215
FATEE 35-C	V	14	35.5	26.0	28.0	5.0	20.0	0.8	215
FATEEL 35-A	V	15	36.5	27.5	50.0	5.0	22.5	0.8	215
FATEI 35-A	V	12	35.5	28.5	29.0	5/7.5	20.0	1.0	215
FATEI 40-A	V	12	40.5	29.0	32.0	5.0	22.5	0.8	345
FATEI 40-B	H	12	40.5	37.0	27.0	5.0	28.2	1.0	345
FATEI 40-C	V	16	42.0	28.0	35.0	5.0	22.5	0.8	345
FAFATEI 40-D	H	14	40.5	35.0	29.0	5.0	25.8	0.8	345
FATEE 42-A	H	16	44.5	42.0	41.5	5.0	34.0	1.0	400
FATEE 42-B	H	12	47.0	42.0	39.5	5/7.5	33.0	1.0	400
FATEE 42-C	V	18	46.0	32.5	46.0	5.0	27.5	1.0	400
FATEE 42-D	V	12	46.0	42.5	37.0	7.4	36.4	1.0	420
FATEE 42-E	V	12	43.0	40.5	45.0	5.0	32.5	1.0	420
FATEE 42-F	H	17	43.0	47.0	45.0	2.5/5	37.7	1.0	420
FATEE 42-G	V	18	46.0	38.0	47.0	5.0	30.0	1.0	420
FATEE 50-A	V	18	51.0	40.0	40.0	5.0	30.5	1.0	500
FAFATEE 55-A	H	20	56.0	55.0	50.5	5/7.5	45.2	1.0	814

Note: The output power is only for forward model and the frequency at 100kHz

PHYSICAL CHARACTERISTICS

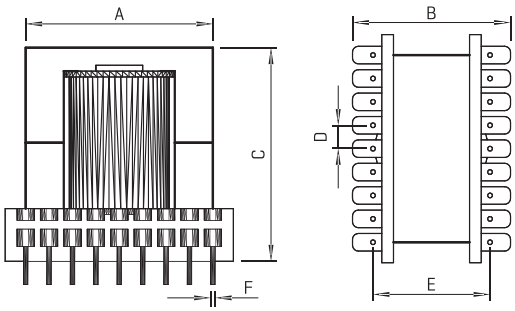

TYPE V

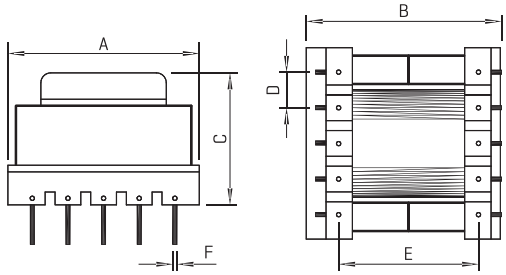

TYPE H

ALL DIMENSIONS IN MM